ARTUS

ELECTRIC LIFTING COLUMNS

ALC Series | Customer Selection Table

MODEL SELECTION

Parameter	ALC-SQ125	ALC-SQ142	ALC-RS125	ALC-RS136	ALC-RT193
Housing shape	Square	Square	Rounded square	Rounded square	Rectangular
Outer profile (mm)	125 × 125	142 × 142	125 × 125	136 × 136	193 × 141
Max. push force (N)	500	1500	500	500	1500
Max. pull force (N)	500	1500	500	500	1500
Maximum speed (mm/s)	100	150	100	100	150
Speed load condition	Not specified	Not specified	Not specified	Not specified	800 N load
Input voltage (V DC)	25–48	48	25–48	25–48	48
Reference body weight (kg)	12.5	14.5	12.5	12.5	17
Weight source notation	(420 / 425)	(500 / 500)	(420 / 425)	(420 / 425)	(400 / 400)
Dynamic lateral moment (N·m)	500	500	500	500	800
Static lateral moment (N·m)	700	700	700	700	1000
Noise level (dB)	48–65	48–65	48–65	48–65	48–70
Operating temperature (°C)	−35 to +75	−35 to +75	−35 to +75	−35 to +75	−35 to +75
Standard stroke (mm)	300–800	300–800	300–800	300–800	300–800
Drive type	DC Servo Motor	DC Servo Motor	DC Servo Motor	DC Servo Motor	DC Servo Motor
Screw type	Ball Screw	Ball Screw	Ball Screw	Ball Screw	Ball Screw
Ball screw lead (mm)	20	20	20	20	20
Reduction ratio	10:1	10:1	10:1	10:1	10:1
Protection rating	IP54	IP54	IP54	IP54	IP54
Limit options	Software / mechanical	Software / mechanical	Software / mechanical	Software / mechanical	Software / mechanical
Communication options	CANopen / EtherCAT / RS485	CANopen / EtherCAT / RS485	CANopen / EtherCAT / RS485	CANopen / EtherCAT / RS485	CANopen / EtherCAT / RS485
Cable routing	Internal; custom on request	Internal; custom on request	Internal; custom on request	Internal; custom on request	Internal; custom on request
Color	Silver gray; custom black	Silver gray; custom black	Silver gray; custom black	Silver gray; custom black	Silver gray; custom black

RT193: maximum speed 150 mm/s at 800 N load. Maximum force and maximum speed are separate selection values.

Weights are for reference only. Actual weight varies by model, stroke and configuration. Please contact ARTUS to confirm the weight for your selected model.

ALC-SQ125

Square Profile | Technical Specifications

TECHNICAL SPECIFICATIONS

Parameter	Unit	Value
Outer profile (mm)	mm	125 × 125
Max. push force	N	500
Max. pull force	N	500
Maximum speed	mm/s	100
Speed load condition	—	Not specified
Input voltage	V DC	25–48
Dynamic lateral moment	N·m	500
Static lateral moment	N·m	700
Reference body weight	kg	12.5
Noise level	dB	48–65
Operating temperature	°C	−35 to +75
Standard stroke	mm	300–800
Drive type	—	DC Servo Motor
Screw type	—	Ball Screw
Ball screw lead	mm	20
Reduction ratio	—	10:1
Protection rating	—	IP54
Limit options	—	Software / mechanical
Communication options	—	CANopen / EtherCAT / RS485
Cable routing	—	Internal; custom on request
Color	—	Silver gray; custom black



REFERENCE WEIGHT

12.5 kg
Source notation: (420 / 425)

DIMENSION REFERENCE (mm)

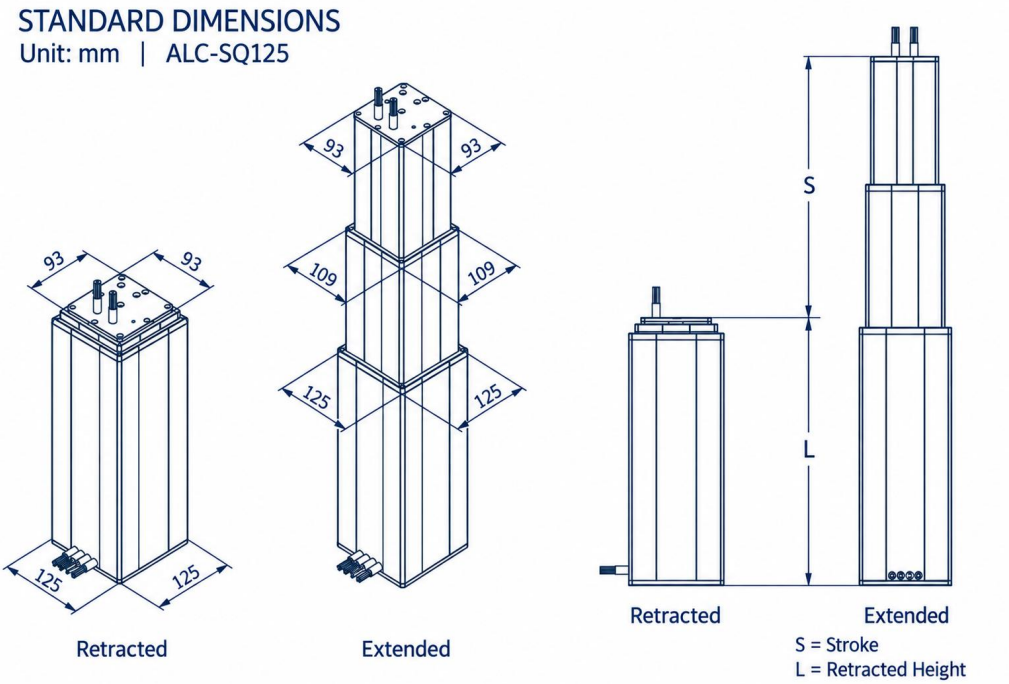

ALC-SQ142

Square Profile | Technical Specifications

TECHNICAL SPECIFICATIONS

Parameter	Unit	Value
Outer profile (mm)	mm	142 × 142
Max. push force	N	1500
Max. pull force	N	1500
Maximum speed	mm/s	150
Speed load condition	—	Not specified
Input voltage	V DC	48
Dynamic lateral moment	N·m	500
Static lateral moment	N·m	700
Reference body weight	kg	14.5
Noise level	dB	48–65
Operating temperature	°C	−35 to +75
Standard stroke	mm	300–800
Drive type	—	DC Servo Motor
Screw type	—	Ball Screw
Ball screw lead	mm	20
Reduction ratio	—	10:1
Protection rating	—	IP54
Limit options	—	Software / mechanical
Communication options	—	CANopen / EtherCAT / RS485
Cable routing	—	Internal; custom on request
Color	—	Silver gray; custom black



REFERENCE WEIGHT

14.5 kg
Source notation: (500 / 500)

DIMENSION REFERENCE (mm)

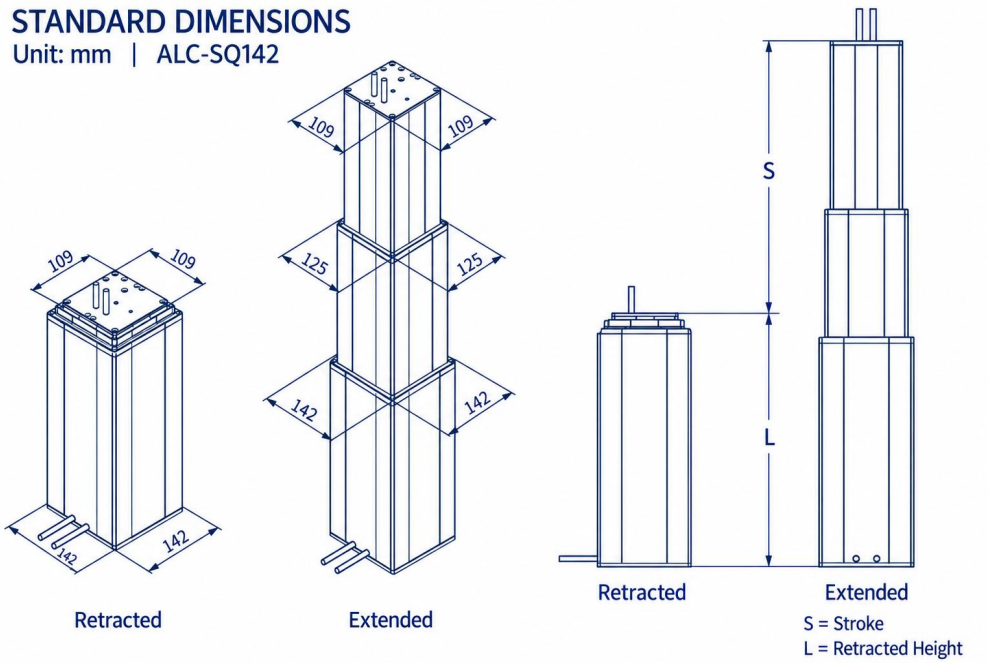

ALC-RS125

Rounded square Profile | Technical Specifications

TECHNICAL SPECIFICATIONS

Parameter	Unit	Value
Outer profile (mm)	mm	125 × 125
Max. push force	N	500
Max. pull force	N	500
Maximum speed	mm/s	100
Speed load condition	—	Not specified
Input voltage	V DC	25–48
Dynamic lateral moment	N·m	500
Static lateral moment	N·m	700
Reference body weight	kg	12.5
Noise level	dB	48–65
Operating temperature	°C	−35 to +75
Standard stroke	mm	300–800
Drive type	—	DC Servo Motor
Screw type	—	Ball Screw
Ball screw lead	mm	20
Reduction ratio	—	10:1
Protection rating	—	IP54
Limit options	—	Software / mechanical
Communication options	—	CANopen / EtherCAT / RS485
Cable routing	—	Internal; custom on request
Color	—	Silver gray; custom black



REFERENCE WEIGHT

12.5 kg
Source notation: (420 / 425)

DIMENSION REFERENCE (mm)

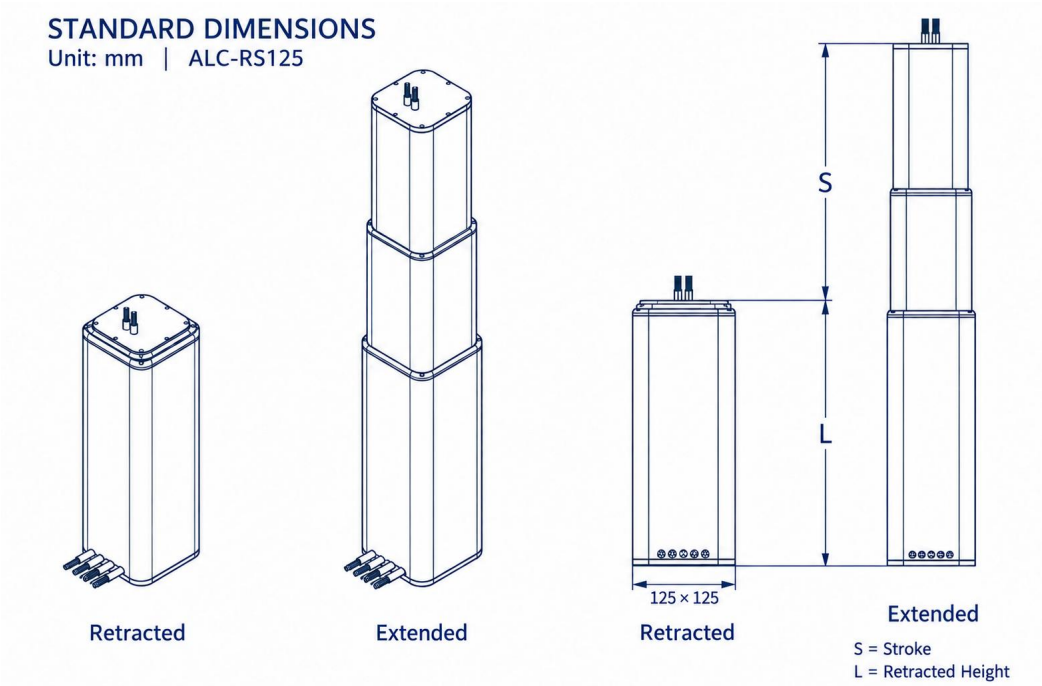

ALC-RS136

Rounded square Profile | Technical Specifications

TECHNICAL SPECIFICATIONS

Parameter	Unit	Value
Outer profile (mm)	mm	136 × 136
Max. push force	N	500
Max. pull force	N	500
Maximum speed	mm/s	100
Speed load condition	—	Not specified
Input voltage	V DC	25–48
Dynamic lateral moment	N·m	500
Static lateral moment	N·m	700
Reference body weight	kg	12.5
Noise level	dB	48–65
Operating temperature	°C	−35 to +75
Standard stroke	mm	300–800
Drive type	—	DC Servo Motor
Screw type	—	Ball Screw
Ball screw lead	mm	20
Reduction ratio	—	10:1
Protection rating	—	IP54
Limit options	—	Software / mechanical
Communication options	—	CANopen / EtherCAT / RS485
Cable routing	—	Internal; custom on request
Color	—	Silver gray; custom black



REFERENCE WEIGHT

12.5 kg
Source notation: (420 / 425)

DIMENSION REFERENCE (mm)

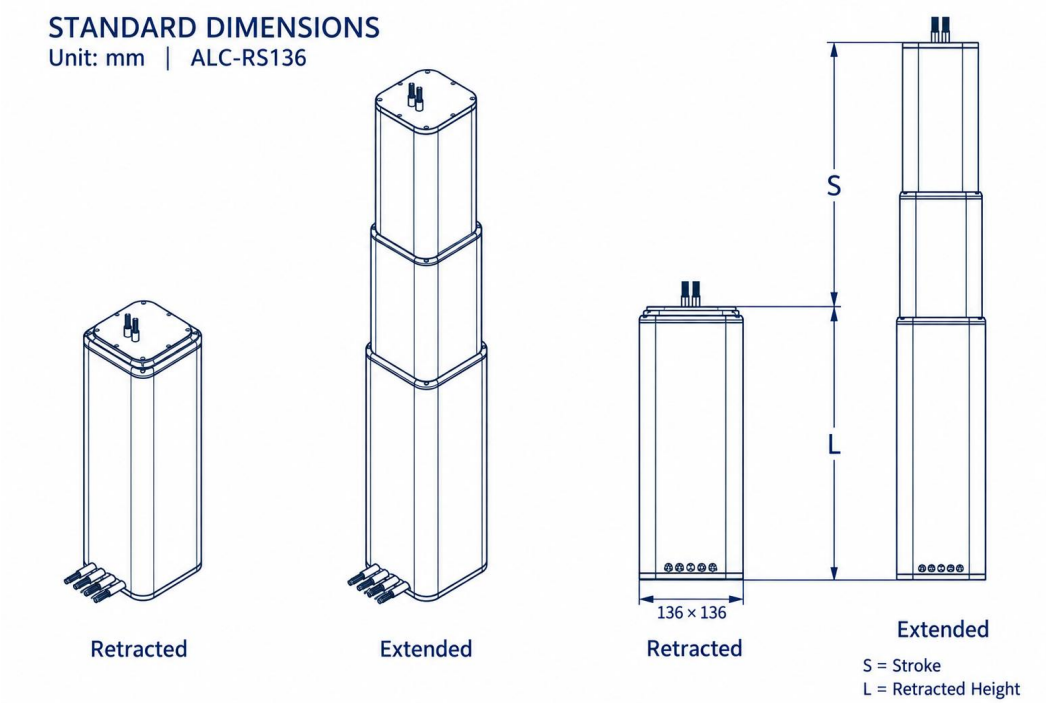

ALC-RT193

Rectangular Profile | Technical Specifications

TECHNICAL SPECIFICATIONS

Parameter	Unit	Value
Outer profile (mm)	mm	193 × 141
Max. push force	N	1500
Max. pull force	N	1500
Maximum speed	mm/s	150
Speed load condition	—	800 N load
Input voltage	V DC	48
Dynamic lateral moment	N·m	800
Static lateral moment	N·m	1000
Reference body weight	kg	17
Noise level	dB	48–70
Operating temperature	°C	−35 to +75
Standard stroke	mm	300–800
Drive type	—	DC Servo Motor
Screw type	—	Ball Screw
Ball screw lead	mm	20
Reduction ratio	—	10:1
Protection rating	—	IP54
Limit options	—	Software / mechanical
Communication options	—	CANopen / EtherCAT / RS485
Cable routing	—	Internal; custom on request
Color	—	Silver gray; custom black

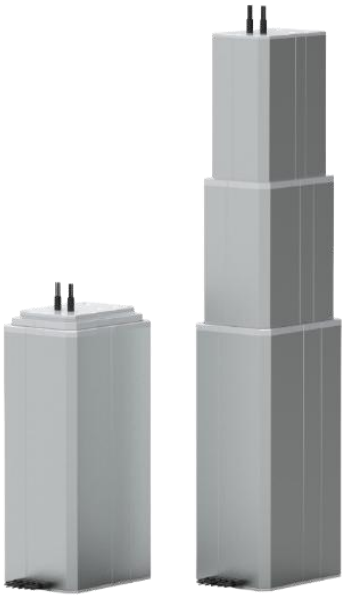

REFERENCE WEIGHT

17 kg
Source notation: (400 / 400)

DIMENSION REFERENCE (mm)

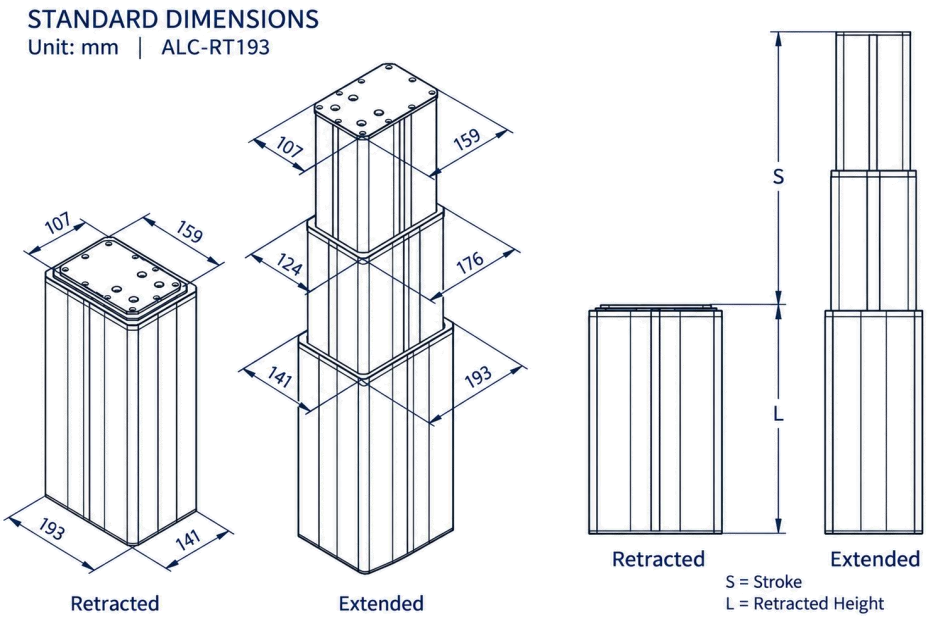

DIMENSIONS & CONFIGURATION

Standard selections and options | Dimensions in mm

STANDARD STROKE & HEIGHT

Dimension	300	400	500	600	700	800
Stroke S (mm)	300	400	500	600	700	800
Closed height L (mm)	400	450	500	600	650	700
Extended height S + L (mm)	700	850	1000	1200	1350	1500

Reference dimensions; applicability and installation height must be confirmed for each model.

OUTER PROFILE SIZES

Model	Shape	Profile (mm)	Model	Shape	Profile (mm)
ALC-SQ125	Square	125 × 125	ALC-RS125	Rounded square	125 × 125
ALC-SQ142	Square	142 × 142	ALC-RS136	Rounded square	136 × 136
ALC-RT193	Rectangular	193 × 141			

CONFIGURATION OPTIONS

Communication	CANopen / EtherCAT / RS485	**Cable routing**	Internal; external/custom on request
Screw type	Ball screw; alternate by confirmation	**Finish**	Silver gray; custom black option

Options vary by model and configuration; please confirm availability before ordering.

CABLE EXIT POSITIONS

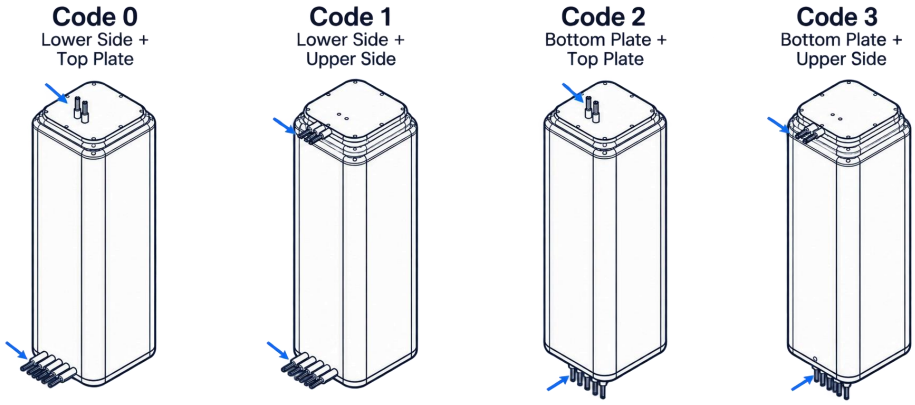

Illustrative positions only. Confirm code-to-exit mapping and model availability with ARTUS.

For quotation: model, load, lateral moment, stroke, closed height, speed, voltage, communication and cable exits.